STRATO
Quality Railroad Products

NEW PRODUCT INFORMATION

VERTICAL PIN RETAINER BOLT REPLACEMENT

AS PER AAR CIRCULAR LETTER C-10633, DATED NOVEMBER 21, 2007

STRATO EOC-BRS KITS CURRENTLY AVAILABLE:

ALL PIN RETAINERS PATENTED

STRATO PART #: EOC-BRS

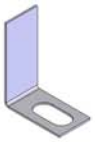

EOC-BRS KIT IN APPLICATION

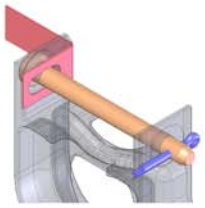

RECOMMENDED RETAINER DEVELOPED FOR FIELD INSTALLATION. CAN BE INSTALLED IN PLACE WITH NO NEED TO DROP THE F-BRACKET. FITS ALMOST ALL BRACKETS.

STRATO PART #: EOC-BRS3

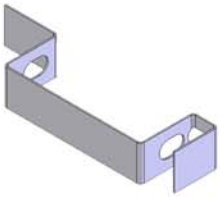

EOC-BRS3 KIT IN APPLICATION

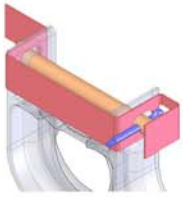

DESIGNED TO RETAIN BOTH ENDS OF THE PIN, NOT JUST ONE. THIS DESIGN HAS BEEN REQUESTED BY A MAJOR RAIL CAR LEASING COMPANY AND IS AVAILABLE TO ALL RAILROADS.

Customer Service - Phone: (800)792-0500 Fax: (800)378-7286
customerservice@stratoinc.com
100 New England Avenue, Piscataway, NJ 08854

STRATO EOC-BRS KIT INSTALLATION:

1.) CUT HEAD OFF OF OLD BOLT.

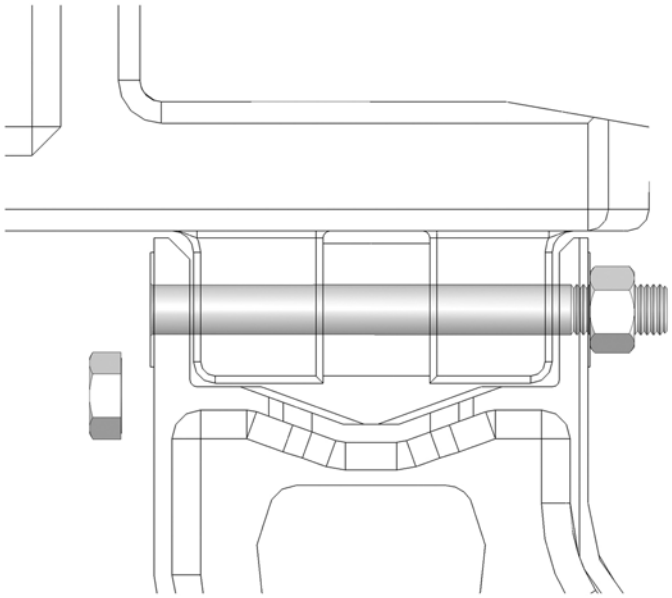

2.) DRIVE PIN IN 1/2". BACK PIN OUT AND THEN INSERT RETAINER.

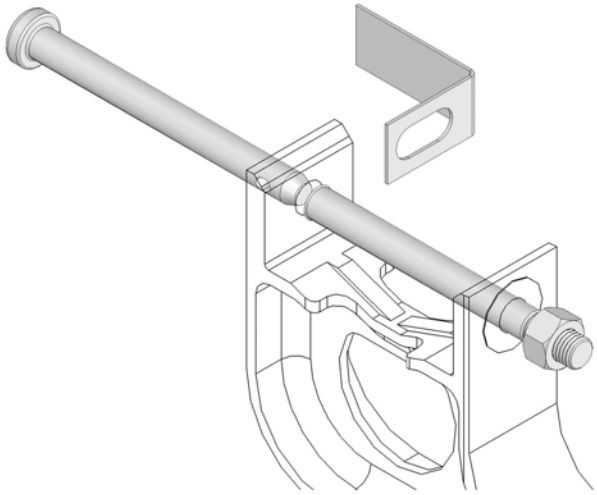

3.) DRIVE PIN THROUGH AND INSERT COTTER PIN.

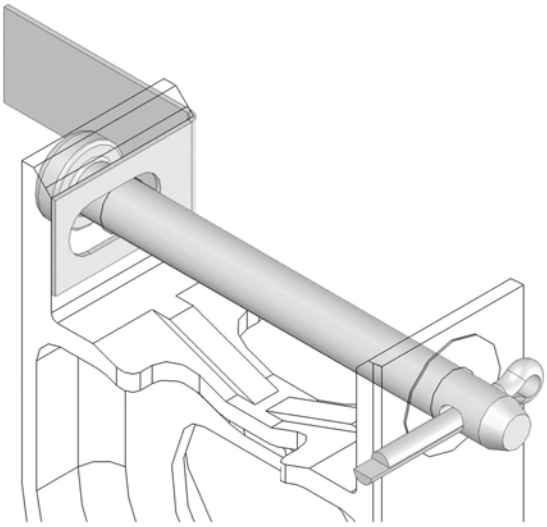

4.) BEND COTTER PIN AND TAB ON RETAINER.

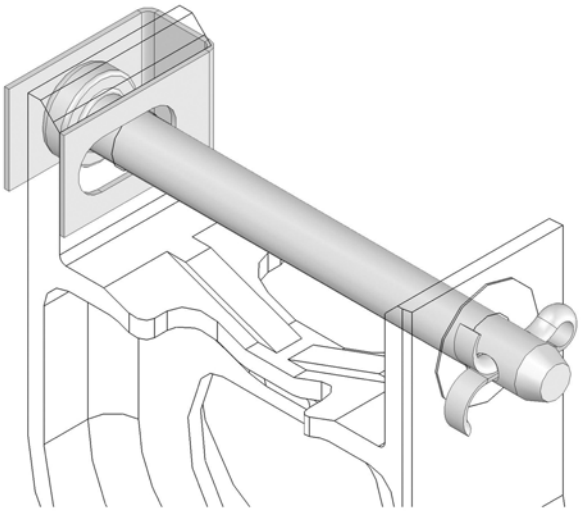

Customer Service - Phone: (800)792-0500 Fax: (800)378-7286
customerservice@stratoinc.com
100 New England Avenue, Piscataway, NJ 08854